Block diagram:

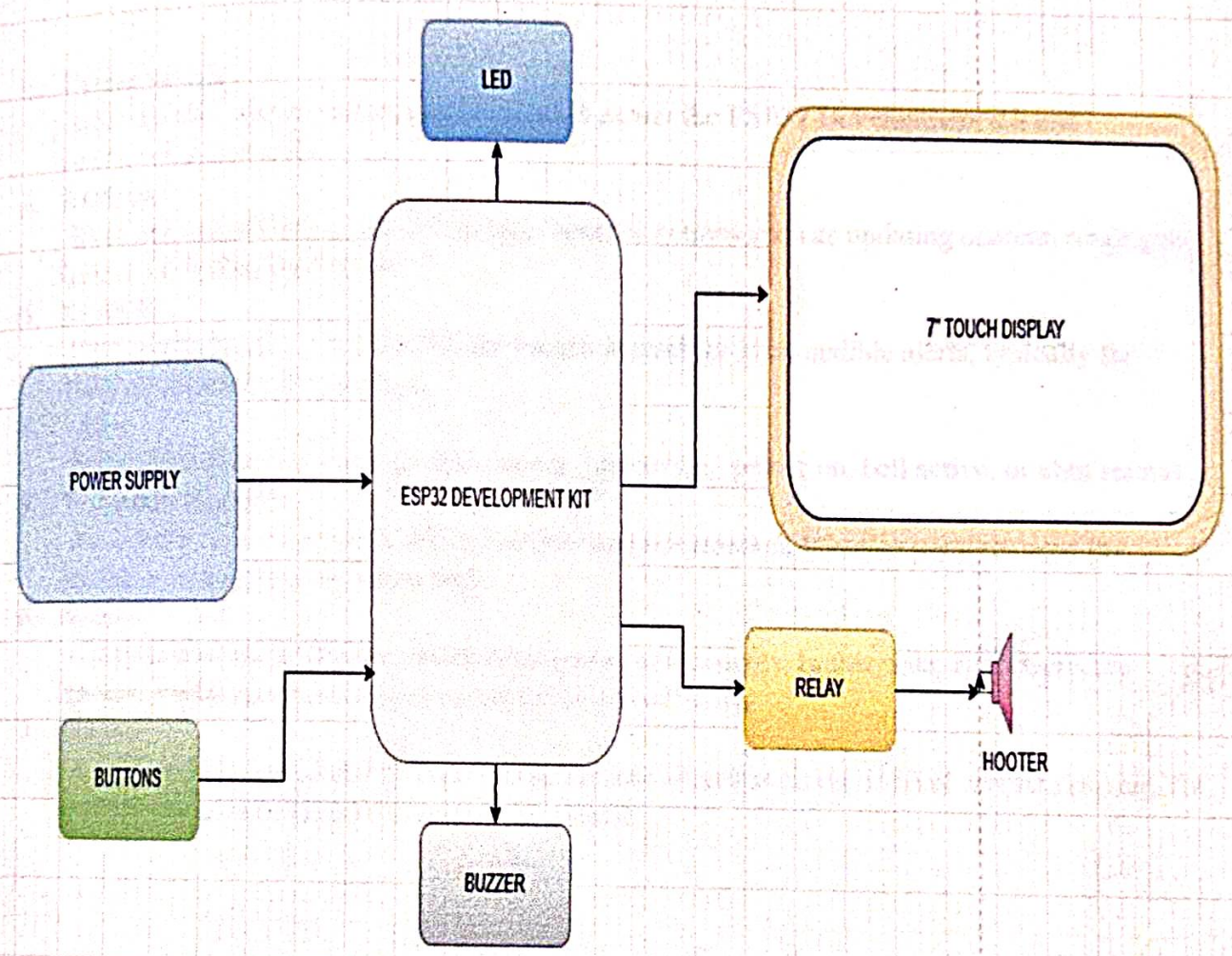

Fig1.1 Block Diagram of the Project

1.3 Block diagram description:

The system is centered around the **ESP32 Development Kit**, which acts as the main controller for all components. It performs multiple functions including handling user inputs, triggering the bell, and updating display content.

1. **Power Supply:**
   Provides the required voltage and current to power the ESP32 Development Kit and connected peripherals.
2. **Buttons:**
   Used as manual input controls to trigger specific actions such as updating content, ringing the buzzer, or testing the system.
3. **Buzzer:**
   Connected directly to the ESP32, the buzzer is used for local audible alerts, typically for short notifications or warnings.
4. **LED:**
   Serves as a status indicator to show system states (e.g., power on, bell active, or alert status).
5. **7" Touch Display:**
   Acts as the user interface to display notices and information. It is also possibly used for setting or scheduling the exam bells.
6. **Relay:**
   Controlled by the ESP32 to switch high-power components. In this case, it activates the **hooter**, which generates a loud sound for exam bell alerts.
7. **Hooter:**
   A high-volume output device used to signal exam start/end times or breaks. It is triggered via the relay to isolate the ESP32 from high current.

Circuit Diagram:

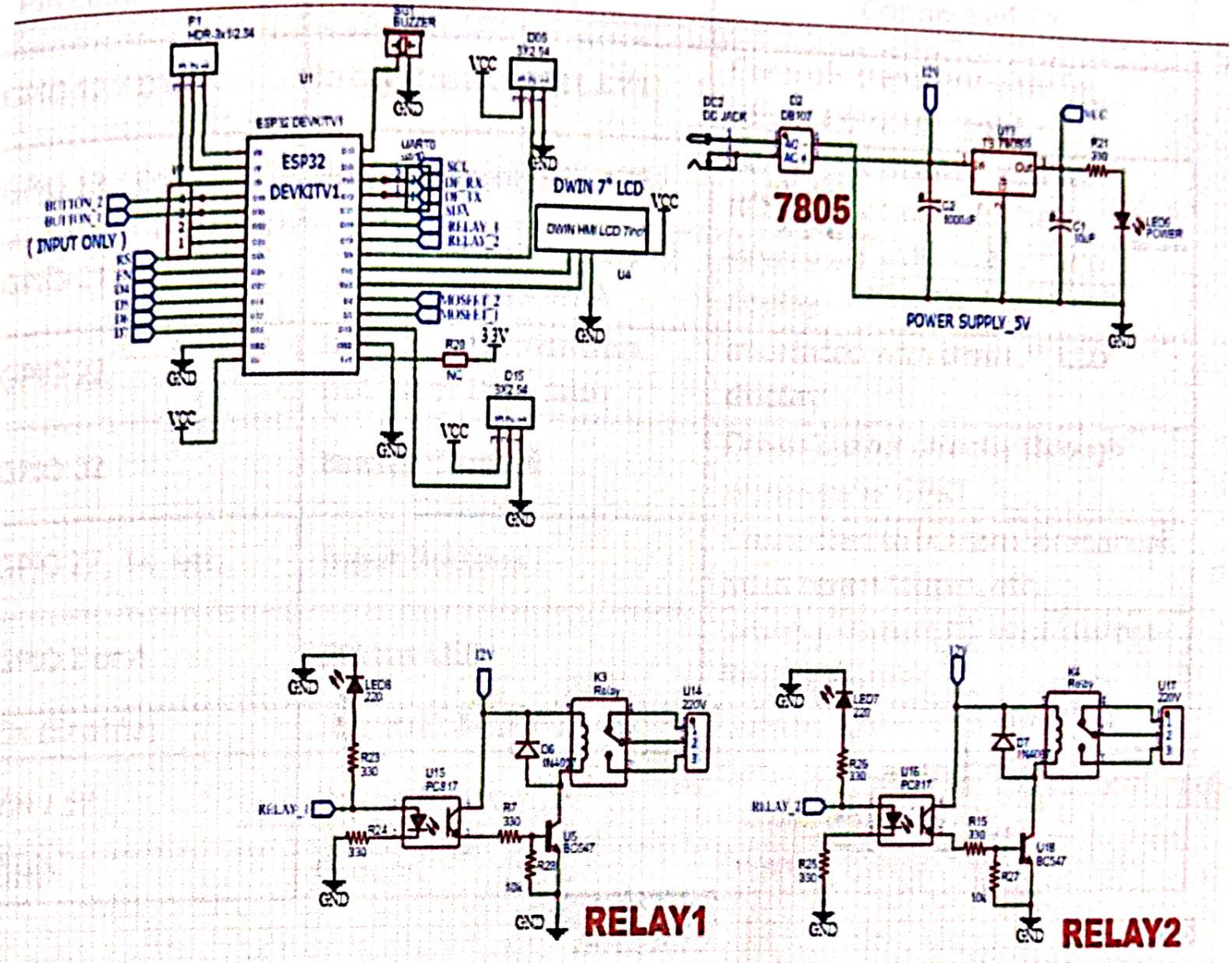

Fig1.2 Circuit Diagram of the board

1.4 Pin description:

Pin Label (ESP32)	Function	Connected To
GPIO 12 / D12	Relay Control (RELAY1)	Controls transistor base for RELAY1 (hooter/bell)
GPIO 13 / D13	Relay Control (RELAY2)	Controls transistor base for RELAY2 (optional device)
GPIO 21	LCD Communication (RX/TX or Data line)	Interfaced with DWIN 7" LCD display
GPIO 22	LCD Communication (RX/TX or Data line)	Interfaced with DWIN 7" LCD display
GPIO 32	Buzzer Control	Drives buzzer directly through transistor or GPIO
GPIO 27, 14, etc.	Input Buttons	Connected to buttons for manual input (exam trigger, etc.)
GPIO 2 or 4	Status LED	Drives a status LED via a current-limiting resistor
EN (Enable)	Reset/Enable Pin	Used to enable or reset ESP32
VIN / 5V	Power Input	Gets regulated 5V from the 7805-voltage regulator
GND	Ground	Common ground for all modules